TRAILER OFFER

MOBI HOUSE

2021

Mobi House
tiny home big living

ABOUT COMPANY

Mobi House trailers are designed by people who have been building mini- houses for years, and made every effort to be like most suited in terms of ease, security and speed assembly. Mobi House is a family business, being a pioneer on the Polish home market a tiny house type. Thanks gained experience in mobile construction houses, we met the producers and independent builder and we have created chassis best suited to mobile building. Our platforms under the tiny house has been designed with safety, on the best Knott components.

The last thing you want to face is building a house on a trailer that is either undersized or does not allow securely fastening the house to it. Our trailers are built to heavy duty standards which they require small houses to connect the building securely and to own it he has a stable foundation. Mobile platforms are ready to be built, have homologation and a COC certificate entitling them to register at throughout Europe. And most importantly, they are at an attractive price and with short waiting time for collection. Save time and money, by buying a trailer designed especially for your little one mobile home.

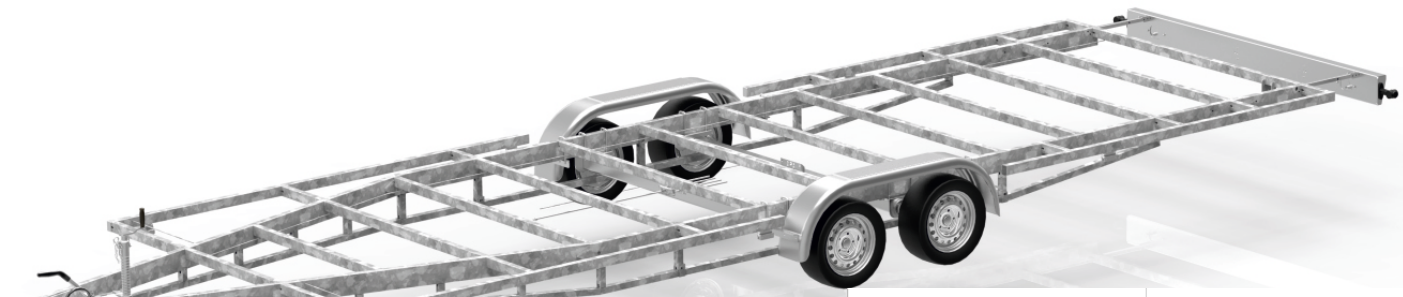

DMC	3500KG
AXES	2XVGB18
OVERRUN DEVICE	KFG35-D
FRAME	HOT-DIP GALVANIZED

KNOTT

Chassis based on the highest quality KNOTT components.

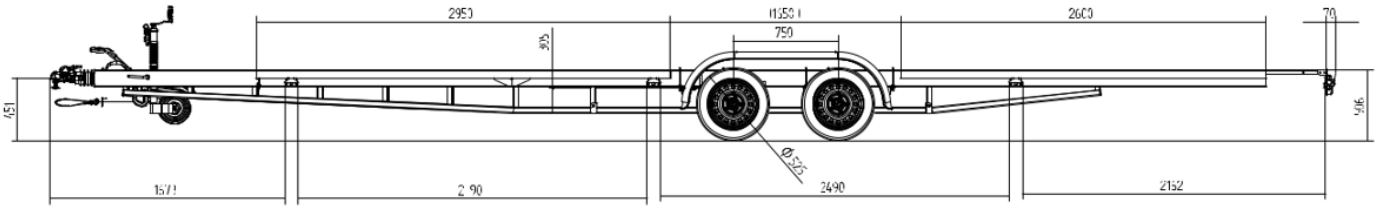

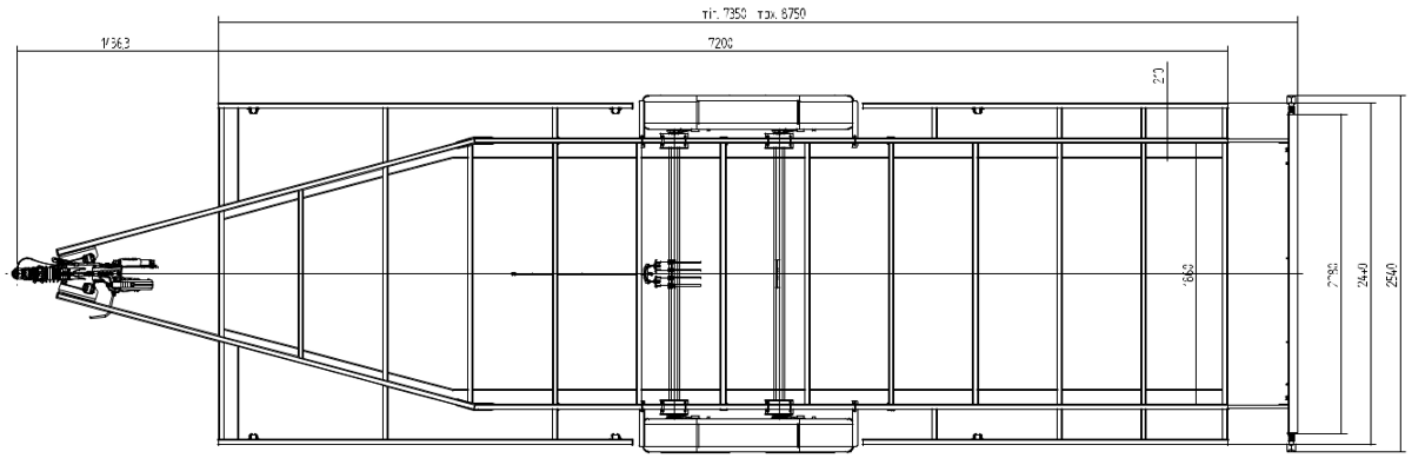

NUMBER	TONNAGE	LENGTH	WIDTH
P40018.001	3500	7200	2440
P40018.901	3500	5420	2440
P40018.902	3500	6020	2440
P40018.903	3500	6620	2440
P40018.904	3500	7800	2440
P40018.905	3500	8400	2440

All profiles enclosed in the frame are perforated, which prevents the accumulation of water inside, and additionally allows the flow of zinc inside, hence the protection against corrosion is definitely the highest. All frames offered are hot-dip galvanized both inside and outside the profiles

Knott support wheel used in the offered chassis in notched, thanks why it is much more stable and reliable it kept in the huddle. Body the support wheel is complete hot dip galvanized so that resistance to conditions weathering and corrosion weathering and corrosion bigger. Maximum load Tk48 static wheels with a corrugated tube is 200kg.

Support wheel mounting in the housing of the device KFG35-D overrun by Knott is the most powerful solution for market.

Fender bracket that can be moved independently of the axle - freedom of choice of fenders.

Possibility to extend or completely disassemble the lamp bracket depending on the needs andconstruction structure "house".

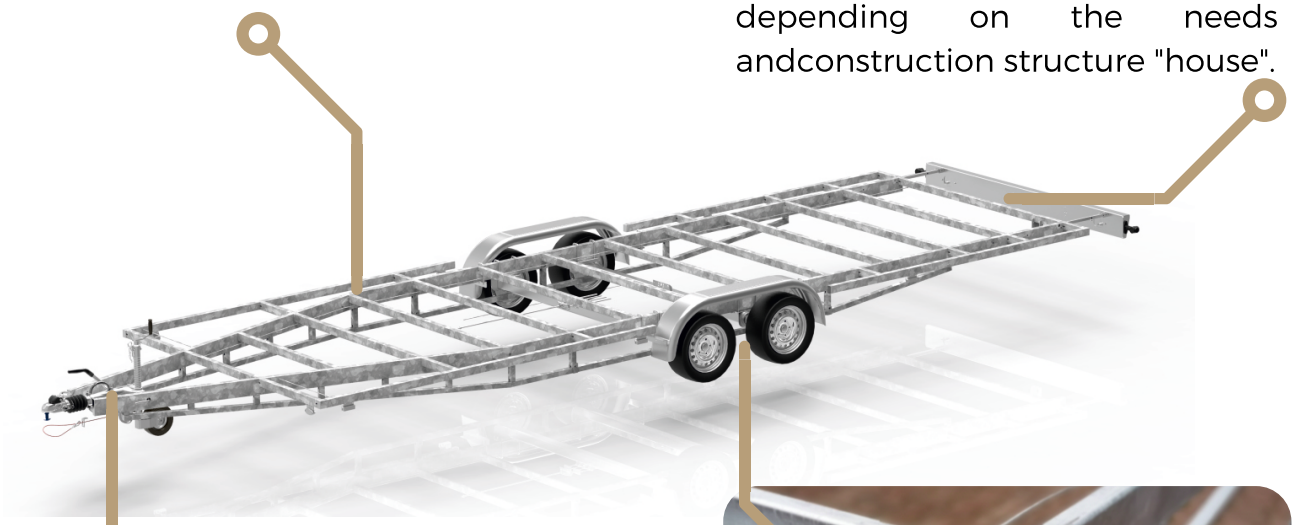

A strong and durable support wheel combined with a reliable overrundevice.

Axles can be adjusted to suit the body's center of gravity. An additional crossbar allows the mounting of the shock absorber to the frame.

All profiles enclosed in the frame are perforated, which prevents the accumulation of water inside, and additionally allows the flow of zinc inside, hence the protection against corrosion is definitely the highest. All frames offered are hot-dip galvanized both inside and outside the profiles.

Clamping adjustable with stirrups

PRICE LIST

TRAILERS WITH 'PROTRUDING' FENDERS						
MODEL		LENGHT [CM]	PLATFORM DIMENSIONS [CM]	HEIGHT [CM]	CAPACITY [KG]	PRICE NETTO [EUR]
TH540 3500 KG	2 X AS 1800 KG	710	542X244	52	2920	**3700**
TH600 3500 KG	2 X AS 1800 KG	770	602X244	52	2890	**3800**
TH660 3500 KG	2 X AS 1800 KG	830	662X244	52	2870	**3930**
TH720 3500 KG	2 X AS 1800 KG	890	720X244	52	2850	**4050**
TH780 3500 KG	2 X AS 1800 KG	950	780X244	52	2830	**4170**
TH840 3500 KG	2 X AS 1800 KG	1010	840X244	52	2800	**4350**

ACCESSORIES	
SPECIFICATION	PRICE NETTO [EUR]
SPARE WHEEL WITH DIMENSIONS 185 / R14 900 KG 6,2 Bar	**150**
SPARE WHEEL WITH DIMENSIONS 195 / 50R13 900 KG 6,2 Bar	**150**
SPARE WHEEL HANDLE AND MOUNTING SCREWS	**150**
ALUMINIUM GRAY RIMS 185 / R14 900KG 6,2 Bar	**325**
ALUMINUM BLACK RIMS 185 / R14 900KG 6,2 Bar	**325**
ALUMINIUM GRAY RIMS 185/R14 900KG 6,2 Bar	**325**
2 WEDGES FOR WHEELS	**80**
4 STRONG ATTACHED SUPPORTS	**350**
CERTIFICATE OF CONFORMITY (COC) - NECESSARY FOR REGISTRATION	**20**

STANDARD EQUIPMENT

On D-O models, the chassis has a standard with od 244cm, but due to the wheels. The external dimension of the entire trailer is 255 cm. Each trailer is equipped withLED lighting.

DELIOVERY TIME

Delivery time 1-12 weeks.

TRANSPORT

Independent collection of trailers at the following address: ul. Białachowska 1A, 83-210 Zblewo. There is a possibility of delivery to the address indicated. Delivery cost calculated individually.

APPROVAL

To register the platform in European countries, you need a certificate of compliance (C.O.C.), received from the manufacturer.

CONTACT

kontakt@mobihouse.pl
+48 511 198 010
www.mobihouse.pl

Mobi House
tiny home big living

www.mobihouse.pl

The price offer presented here is for information purposes only and doesnot constitute an offer within the meaning of Article 66 paragraph 1 of theCivil Code.